-HW

HW-WHSF
HW-WPHF

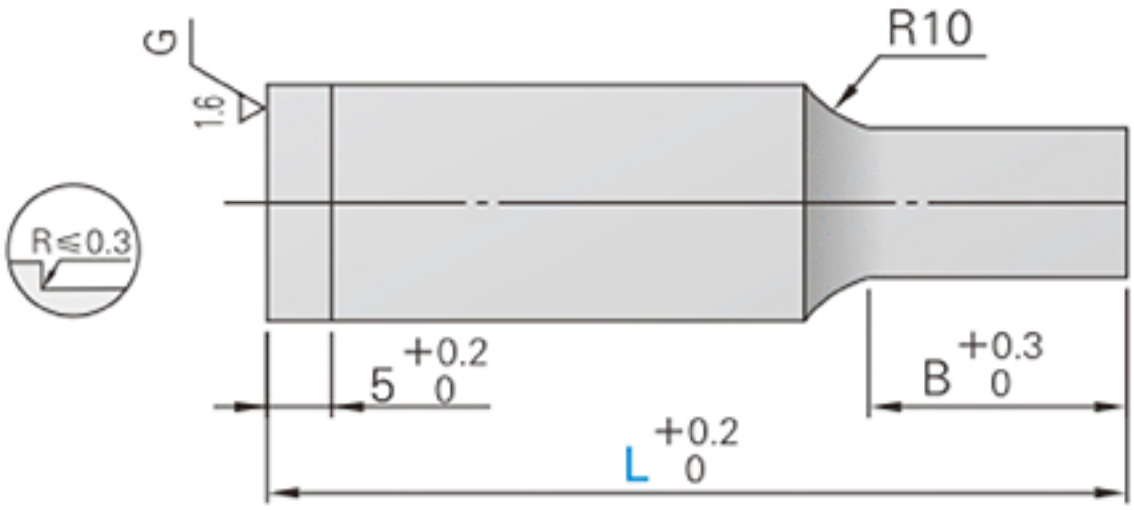

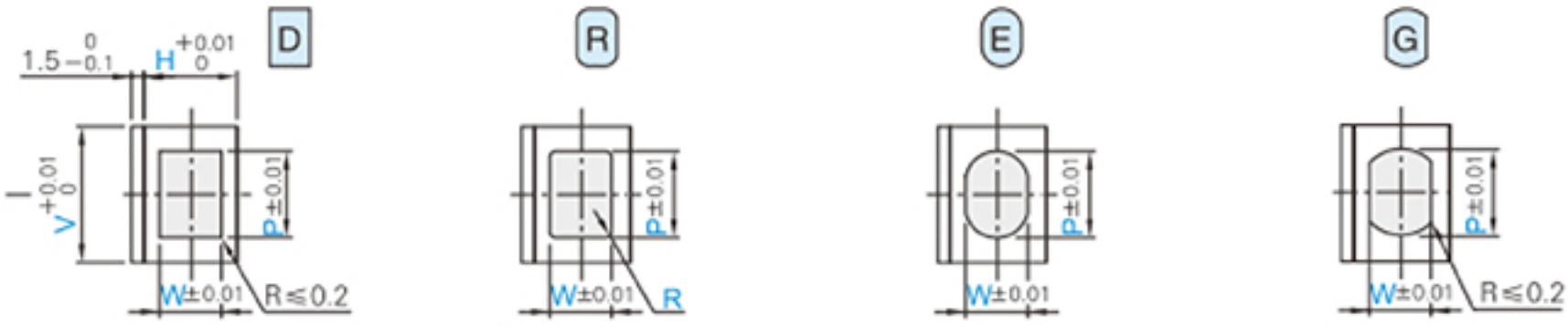

D	R	E	G
W≦P≦Wx20	W≦P≦Wx20 0.15≦R<W/2 0.01mm	W≦P≦Wx20	W<P≦Wx20

P=V , W=H

Catalog No.				
M	H	HW 3000HV (V·H=3~30)		(B) (L>S)
SKH51	61~64HRC	HW-WHSF	D R E G	S L
	64~67HRC	HW-WPHF		

A	ORDER	Catalog No.	-	V	-	H	-	L	-	P (0.01mm)	-	W (0.01mm)	-	R (R)	-	F		
		HW-WHSFDL	-	16	-	13	-	60	-	P15.00	-	W12.00			-	F90		
B	ORDER	Catalog No.	-	V	-	H	-	L	-	P (0.01mm)	-	W (0.01mm)	-	R (R)	-	F	- X (0.01mm)	- Y
		HW-WHSFDL	-	16	-	13	-	60	-	P15.00	-	W12.00			-	F90	- X0.00	- Y0.55

Catalog No.			V	3	4	5	6	8	10	13	16	20	22	25	28	30	L	B	
Type	刃口形状	刃口长度	H \ Pmin / Wmin	1.5	2.0	2.5	3.0	3.0	4.0	5.0	7.0	8.0	9.0	10.0	12.0	12.0		S	L
HW-WHSF HW-WPHF	D R E G	S	(3) 1.0	o	o	o	o	o	o	o	o	o	o				(40) (50) 60 70 80 90 100	6	8
			(4) 1.0		o	o	o	o	o	o	o	o	o						
			5 1.2			o	o	o	o	o	o	o	o	o	o	o		8	13
			6 1.5				o	o	o	o	o	o	o	o	o	o			
			8 2.0					o	o	o	o	o	o	o	o	o			
			10 2.5						o	o	o	o	o	o	o	o		13	19
			13 3.0							o	o	o	o	o	o	o			
			16 4.0								o	o	o	o	o	o		19	25
		L	20 5.0									o	o	o	o	o			
			22 6.0										o	o	o	o			
			25 6.5											o	o	o			
			28 7.0												o	o			
			30 7.5													o			

- L(40)•H10~30 ••••B = 13
- L(50)•H16~30 ••••B = 19
- H(3)•(4) ••••L40~70

■ Fastening method of punch:

1、Punch fixed plate benchmark: This method is the most common method and should not be used for molds with small gaps.
（The punch is driven into the punch fixing plate, so the mold production is very simple. If the coaxiality of the punch and the hole processing accuracy of the punch fixing plate are low, the gap between the punch and the die is prone to unevenness, so it should not be used for molds with small gaps.）

2、Unloading plate benchmark: This method is mainly used for high-precision molds of thin plates.
（On the discharge plate close to the male mold and the female mold, the blade of the male mold has a guide device, so the accuracy error can be kept to a minimum. The punch fixing plate is fastened by fitting the gap.）

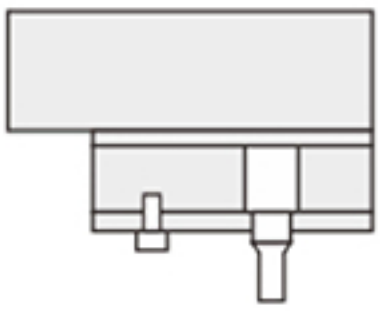

凸模固定压板使用示意图1

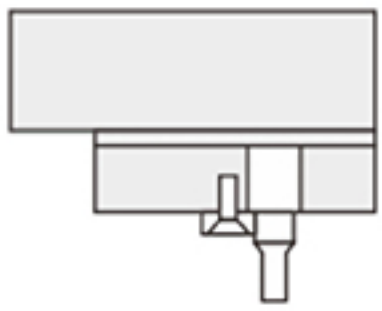

凸模固定压板使用示意图2